ASSEMBLY INSTRUCTIONS

ITEM NO:UL-3Drawer

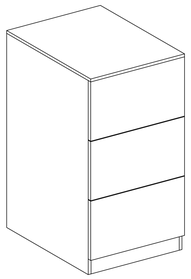

MATERIAL REQUIRED FOR INSTALLATION

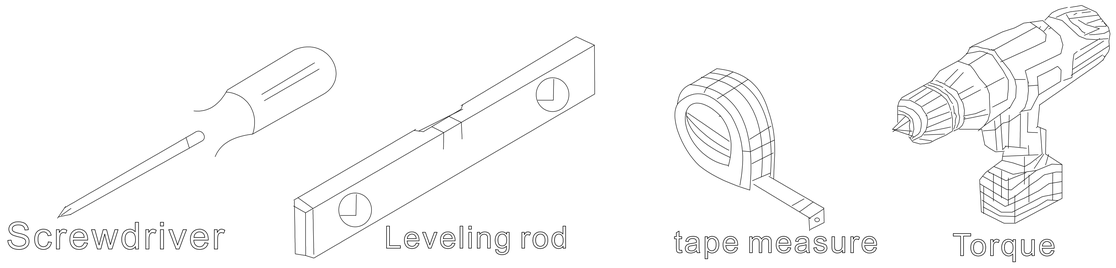

ACCESSORIES LIST

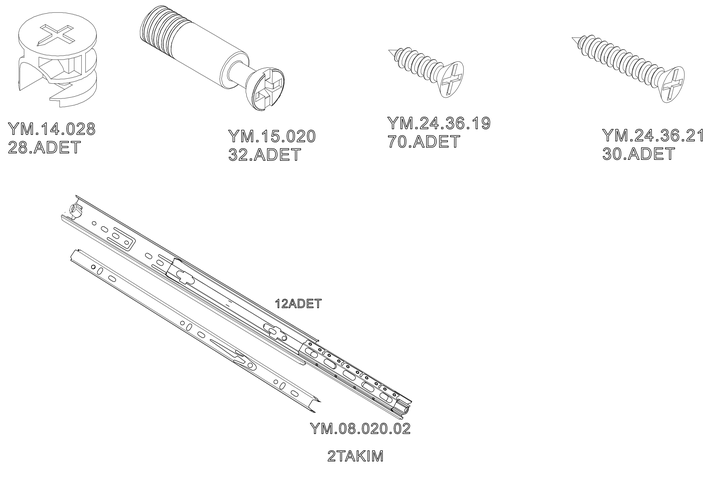

1

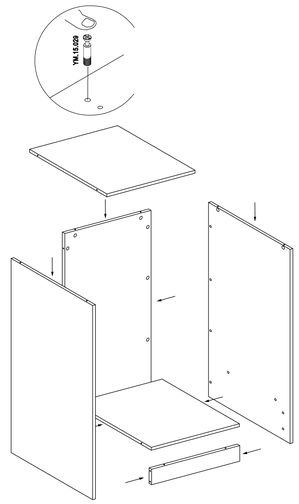

2

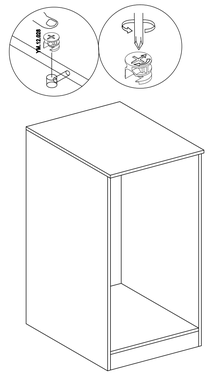

3

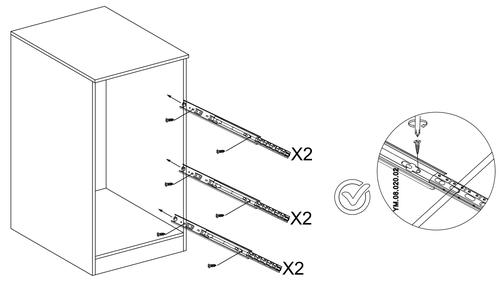
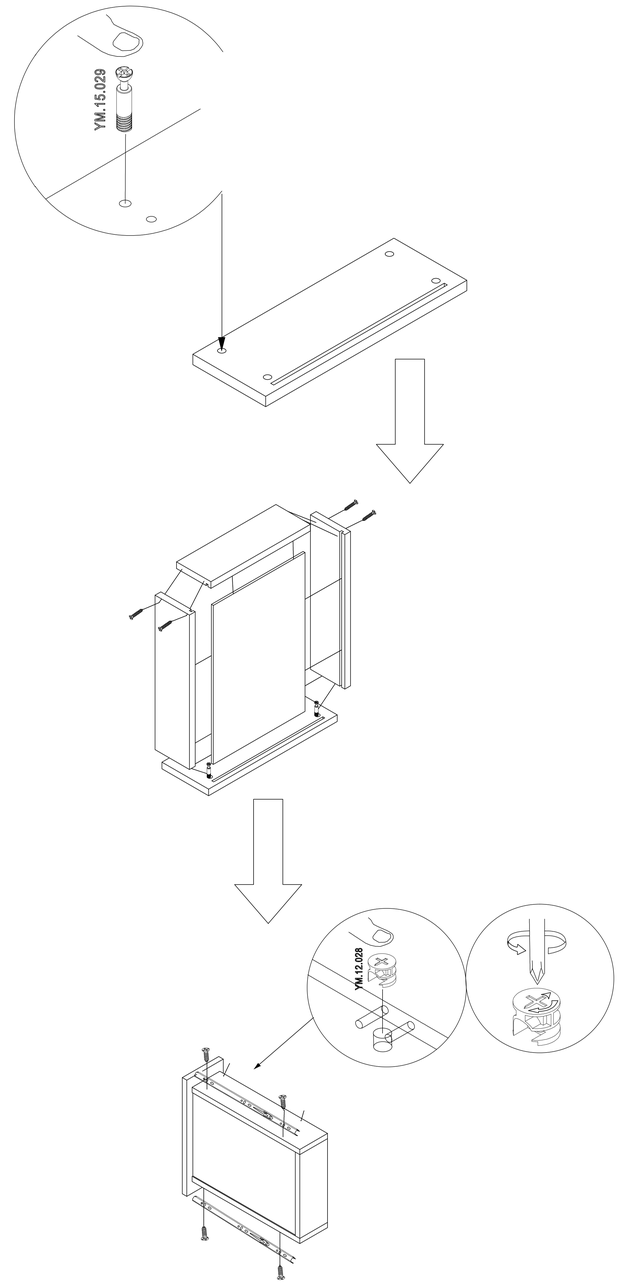
4